**Proceedings of ICEF2006**
**2006 Fall Technical Conference**
**November 5th - 8th, 2006, Sacramento, CA**

# ICEF2006-1521

# COMPARISON OF THREE TYPES OF COMMON RAIL SYSTEMS SUITED FOR DIESEL ENGINES FROM 1 TO 5 MEGAWATT

**Marco Ganser** **Ulrich Moser**

**Ganser CRS AG**
Industriestrasse 26
CH-8404 Winterthur
Switzerland

## ABSTRACT

The basic physical law governing the injection in Common Rail Systems is the compressibility of the fuel. The effects of pressure wave dynamics, the layout of the system volume and its geometrical distribution strongly affect the injection events at every injector. In this Paper, three different arrangements of system volumes and their effect upon the performance of the individual injectors are compared using the hydraulics simulation tool AMESim. Two systems are known in the passenger car and the heavy duty diesel engine domains. The third system is new and takes advantage of pressure wave dynamics to tailor the injection event. This system is best suited for Diesel Engines with a power from 1 to 5 MW, as used in locomotives, ships, power generation and heavy earthmoving machinery. It produces a more favorable pattern of the injection pressure and injection rate shape during any injection event by hydraulically interconnecting the individual injector's accumulators during the injection and taking advantage of pressure wave dynamics. Right after the end of each injection, dynamic pressure pulsations are evened out with a dampening device. A multi-cylinder system provides equal conditions for all injections. Its very simple design and increased performance makes the novel system of very attractive use in the above mentioned fields.

## INTRODUCTION

In early days, the Common Rail injection carried the name Accumulator injection. The closest system to today's widely used passenger car diesel engines

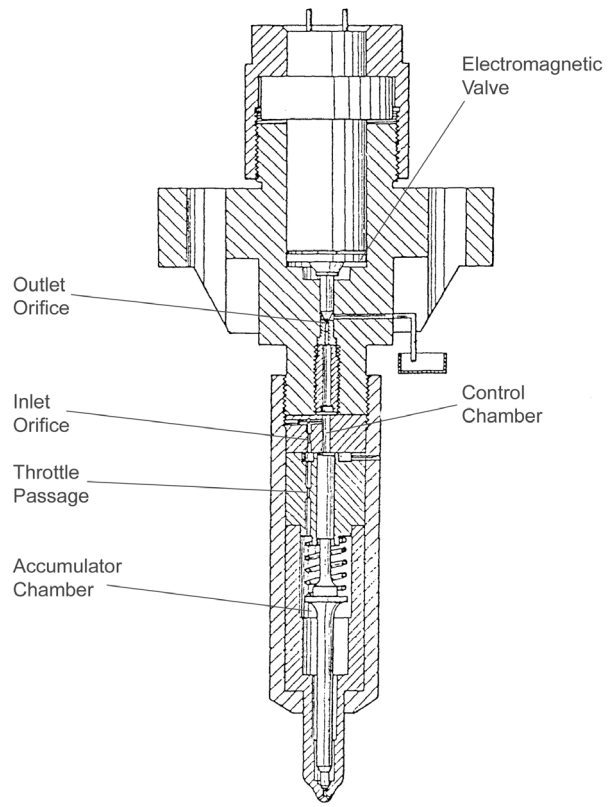


Figure 1: Sectional drawing of Accumulator type injector [1, 2, 3].

 

Common Rail Systems (CRS) was conceived and developed at the Swiss Federal Institute of Technology (ETH) in Zurich under the teaching of Professor Max Berchtold between 1975 and 1983 [1, 2, 3]. Figure 1 is a sectional drawing of this type of accumulator injector, which incorporates the electromagnetic valve as well as the inlet and outlet orifices to control the pressure in a control chamber to open and close the injector needle.

Upstream of the nozzle, fuel is stored in an accumulator chamber, which is connected to the fuel feed system by a restricted throttle passage. The injection event is mainly determined by the quasi static elastic expansion of the fuel in the accumulator and has a continuously falling characteristic, since the throttle passage does not supply sufficient fuel during the injection event, Figure 2. Due to the throttle the pressure pulsation cannot propagate into the remaining high pressure part of the injection system and a uniform distribution of the injected fuel among a number of injectors in a multi-cylinder system is achieved. The highest injection pressure is produced in the fist part of the injection event and the lowest occurs right before the end of the injection event. This is not a desirable injection pattern for diesel combustion.

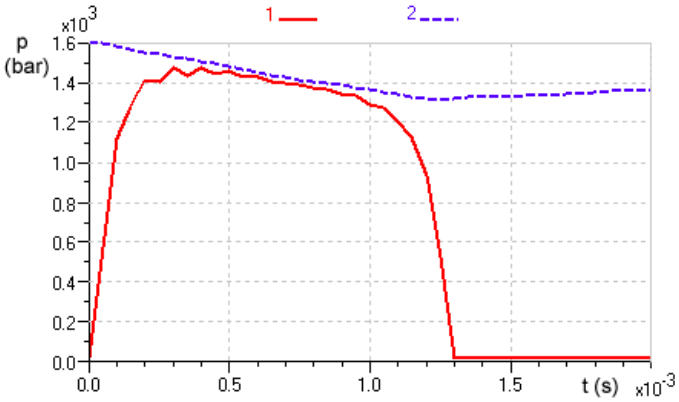


Figure 2: Injection pressure characteristic of the Accumulator type injector: 1 = nozzle sac pressure 2= accumulator pressure.

This ETH Accumulator system was conceived and used on a small engine, and therefore the bulkiness caused by the accumulator volume within the injector body and the resulting large outer shape, were disadvantageous. To overcome this situation, it was necessary to remove the injector accumulator chamber from the injector body and to place it outside of the injector, within the high pressure volume between the pump outlet and the injectors [4, 5]. However, it was not practical to have fuel pipes of a uniform diameter between the pump and the individual injectors. It is more practical to have a rather big tubing of some extension placed between the high pressure feed pump and the injectors: the Common Rail. The pump and the injectors are connected to this tubing by means of fuel pipes of relatively thin dimensions. Now dynamic pressure waves propagate back and forth between every injector and the Common Rail and influence the shape of the injection rate. The injection pressure falls somewhat initially and then recovers during the injection event, Figure 3.

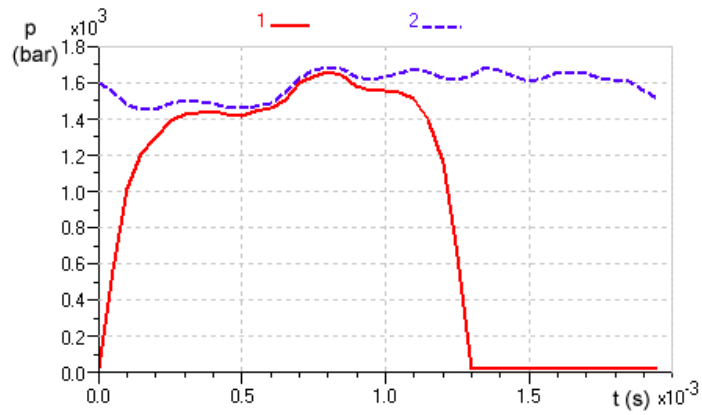


Figure 3: Injection pressure characteristic of the Common Rail injection system for Passenger Car engines: 1 = nozzle sac pressure 2 = feed pipe pressure.

The Common Rail is a quiet pressure region creating a condition of almost equal pressure for all injectors and injections. The pressure pattern is determined almost entirely by the flow induced in the fuel pipe from the opening of the nozzle and the fuel discharged by the injection. The duration period of a pressure oscillation in the injector is mainly determined by the length between the nozzle tip and the rail.

Passenger car engines have a typical speed range from 800 to 4000 RPM. At high speed, full load injection durations of 1.2 to 1.4 ms are common. Combining this time with a suitable needle valve opening speed and a suitable distance between the nozzle seat and the rail, i.e. an appropriate length of the pipe, brings about a good and practical arrangement where the pressure wave returns from the rail to the nozzle seat at a time close to the end of a full-load injection, as shown in Figure 3.

This CRS, introduced on cars in fall 1997 [6], has revolutionized the passenger car diesel engine and today has quite replaced the previous inline or rotary jerk type injection systems in the market.

## NOMENCLATURE

| | | |
|---|---|---|
| A | Area (cross sectional) | m2 |
| Ag | Area (geometric) | m2 |
| B | Bulk modulus of pipe/fluid combination | bar |
| HF | Hydraulic flow | Liters/Min. |
| IF | Inflow into injector | Liters/Min. |
| IR | Injection Rate | Liters/Min. |
| $\Delta p$ | Pressure difference | bar |
| QI | Injection Quantity | mm3/Stroke |
| V | Volume | m3 |
| WDD | Wave Dynamics and Dampening system | - |
| $\alpha$ | Flow coefficient | - |
| $\beta$ | Bulk modulus of fluid | bar |
| $\rho$ | Density | Kg/m3 |

## FEATURES OF ENGINES WITH A POWER OF 1 TO 5 MW

Also in fall 1997, an engine family with a power range from 800 to 2700 kW, was introduced by MTU Motoren- und Turbinen Union Friedrichshafen (Germany), equipped with a CRS manufactured by its subsidiary L'Orange [7, 8]. This system has a rail which is conceptually equal to the passenger car systems.

Today there is an increasing demand of CRS technology from the side of engine manufacturers in the domain of these and larger medium speed engines up to approximately 5 MW.

The lower engine speed of these engines requires longer injection durations as compared to passenger cars. With a cylinder volume of 2 to 6 Liters the maximum speed is about 2000 RPM and the injection duration is 2.5 ms. For engines with up to 25 Liters per cylinder it is roughly 1000 RPM, the injection duration at full load being 5 ms. The engine length poses a challenge to the realization of the rail, because long means heavy and costly. Additionally, the length of the fuel pipes from the rail to every injector is short and causes an undesired, too short propagation time of the pressure wave between the rail and the nozzle seat, which swings back and forth more than once during the injection event.

A Deutz 628 8 cylinder inline engine with a cylinder volume of 12.5 Liters, a power of 2 MW and a max speed of 1050 RPM has been equipped with a CRS with two rails, each one serving 4 cylinders, Figure 4 [9]. The bulkiness of the two rails is in part due to the fact that they must have a double wall for safety reasons. A smaller engine Deutz 616 V16 with a cylinder volume of 2.2 Liters, a power of 1.8 MW and a max speed of 2100 RPM also features a bulky, long rail [10].

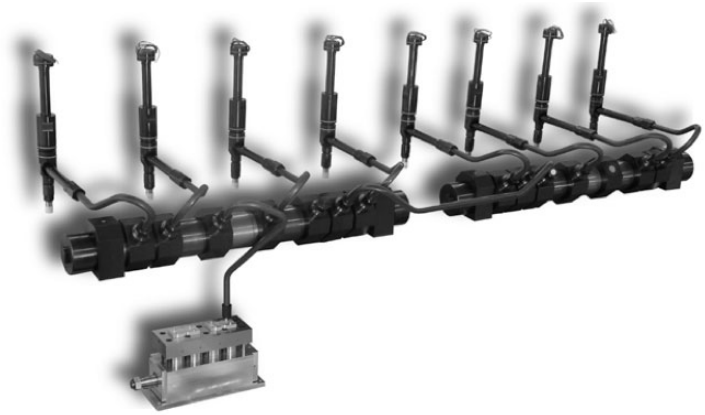

Figure 4: The CRS for the DEUTZ 628 8 cylinder inline engine [9].

On the other hand, there is more space available in the cylinder head as compared to passenger car engines, and thus the former solution with an accumulator chamber within the injector body becomes attractive. The individual injector's accumulators can, like the original Accumulator injection system [1], again be interconnected with high pressure fuel pipes of small dimensions. These can be bended; they easily adapt to the thermal expansion of the engine block and have a much lower cost.

Systems with individual injector's accumulators have been developed and are used on engines in the above mentioned power range [11, 12, 13, 14, 15].

Due to the throttling passage at the inlet of each individual accumulator, the injection pressure has a falling characteristic like the original Accumulator injection system, which to some extent can be mitigated by a big injector's accumulator. This in turn makes the injector bulky even for these engines.

## THE THREE ARRANGEMENTS OF THE SYSTEM VOLUMES

The question is, if configurations of the system volume and its geometrical distribution within the system exist that:

- do not need a rail
- do not have a continuously falling pressure characteristic during the injection event
- have a very uniform fuelling for all engine cylinders, and
- are of simple and practical realization.

Once the conceptual layout is made, an appropriate tool to carry out the functional analysis is the hydraulics simulation software AMESim. The three conceptual CRS compared with AMESim are thus the following:

- System 1) With two fuel rails as designed for the DEUTZ 628 8 cylinder inline engine and shown in Figure 4
- System 2) With 8 individual injector's accumulators, a throttling passage at the inlet of every accumulator and relatively small fuel pipes interconnecting the accumulators and the pump. Figure 5 shows one of the 8 injectors with the location of the inlet throttling passage. The system with this injector type is the same like Figure 6
- System 3) With 8 individual injector's accumulators, a feature at the inlet of every accumulator to take advantage of the pressure wave dynamics in the direction of the injector that is injecting and to dampen and even out dynamic pressure pulsations right after the end of the injection (Wave Dynamics and Dampening system or WDD system), as well as relatively small fuel pipes interconnecting the accumulators and a centrally located pump, Figures 6 and 7.

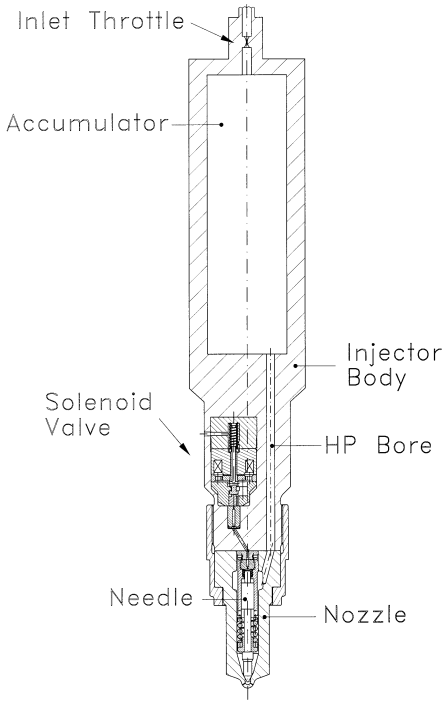


Figure 5: Injector with individual accumulator and throttling passage at the inlet of the accumulator.

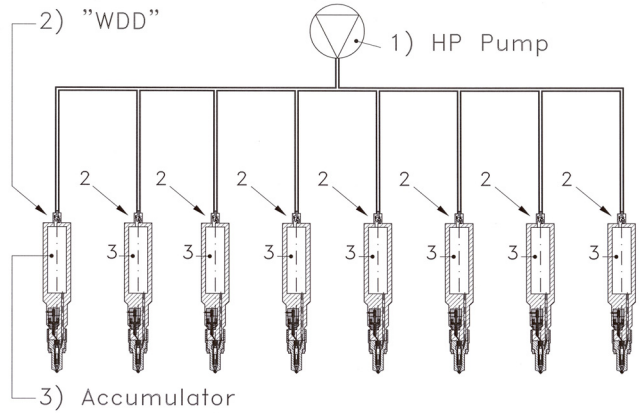


Figure 6: CRS with a Wave Dynamics and Dampening system (WDD, detail see Figure 7).

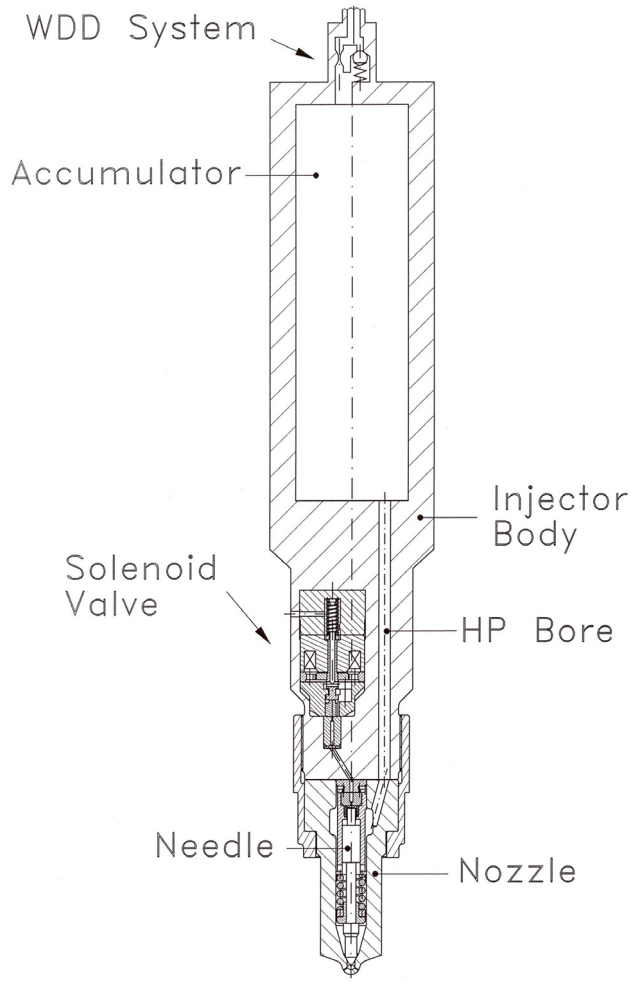


Figure 7: Detail of injector with Wave Dynamics and Dampening system (WDD) as well as individual accumulator.

All three systems operate at the same basic conditions, as specified in Table 1.

| Item | System 1) | System 2) | System 3) |
|---|---|---|---|
| **Main feature** | **2 Rails** | **Accu/Throttle** | **WDD** |
| HP Pump | 4 Plunger with Cam excenter | 4 Plunger with Cam excenter | 4 Plunger with Cam excenter |
| Pump outlet pressure (bar) | 1500 | 1500 | 1500 |
| Engine speed (RPM) | 1000 | 1000 | 1000 |
| Injection frequency (Hz) | 8.33 | 8.33 | 8.33 |
| Engine type | 8 Cylinder inline | 8 Cylinder inline | 8 Cylinder inline |
| Rail/Accumulator No./Volume (cm3) | Rail / 2 / 800 | Accum./ 8 / 70 | Accum./ 8 / 70 |
| Injection Quantity QI (mm3/Stroke) | approx. 2000 | approx. 2000 | approx. 2000 |
| Ratio fuel Volume per Cyl./QI | 100 | 35 | 35 |
| Inj. Duration (ms)/°CA | 5 / 30° | 5 / 30° | 5 / 30° |
| Nozzle flow (cm3/min@100 bar) | 7500 | 7500 | 7500 |
| Simulation Time | 0.96 | 0.96 | 0.96 |
| # of injections during simulation | 64 | 64 | 64 |
| Engine revs during simulation | 16 | 16 | 16 |

Table 1: Main parameters and operating conditions of the Systems 1, 2 and 3 used in the AMESim model.

The Wave Dynamics and Dampening (WDD) feature of System 3 (Figures 6 and 7) consists of a check valve opening in the direction of flow towards the injector's nozzle, paralleled by a throttling passage. Each injector has a WDD. It provides a unidirectional, almost unhindered flow path in the direction of the injector which is injecting, but when the injection event of any injector is interrupted, the check valve closes and prevents the hydraulic hammer departing from the fuel stopped at the nozzle seat to propagate unhindered into the entire fuel system. This hydraulic hammer is discharged slowly into the CRS due to the throttling passage.

The advantages of the WDD feature will be analyzed during the discussion of the simulation results.

Items that are different between the systems explored have been marked darker in Table 1. The difference in the volumes of the three systems is substantial.

The two rails of System 1 have a volume which is 3 times larger than the sum of the individual accumulator volumes of the Systems 2 and 3.To the volumes given in Table 1, the fuel volume of the relatively small fuel lines must be added. This is the sum of the fuel feed pipes and of the connecting pipes volumes, which totals to 260 cm3 and is equal for the Systems 2 and 3. For System 1, due to the two rails, the volume of the connecting pipes is substituted by the rails, the volume of the fuel feed pipes alone is smaller and comes to 220 cm3. Thus, the total fuel volume of System 1 is 1820 cm3, while for Systems 2 and 3 it is 820 cm3.

In all simulations the firing order of the 8 cylinders is 1-4-7-6-8-5-2-3, the same like the engine of Reference [9].

Since the bulk modulus of the fuel is less than ½ percent per 100 bar pressure change, under the condition of a static elastic expansion, a single volume of 70 cm3 would be supplying an injection quantity of 2000 mm3 with a pressure drop over 600 bar.

## THE SIMULATION MODELS

The simulation models of the three systems are similar in many parts and differ only in the components explained in Table 1.

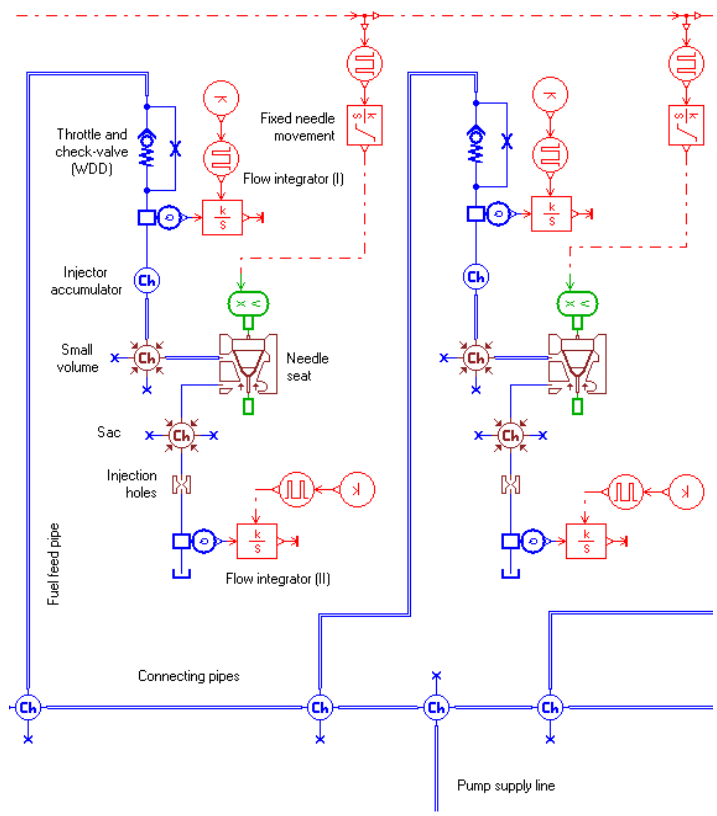


Figure 8: AMESim simulation model of System 3 according to Figures 6 and 7. Only two injectors and their fuel feed pipes and connecting pipes, together with the pump supply line, are shown.

Figure 8 illustrates the simulation model of the relevant part of System 3, including two injectors with the WDD feature according to Figures 6 and 7 and their respective fuel feed pipes, connecting the injectors to the common, relatively thin connecting pipes.

In the following, the AMESim simulation model of Figure 8 is described beginning from the location downstream of every injector's holes and going upstream into the system.

A flow integrator (II) integrates the injected fuel rate as received from a hydraulic flow rate transducer. These values are the result of the outflow from the sac across the injection holes, modelled as a fixed hydraulic orifice according to:

$$IR = \alpha \cdot Ag \cdot \sqrt{\frac{2\Delta p}{\rho}}$$

Fuel flows into the nozzle sac across the needle seat element, which is a poppet valve with conical seat as for example given in the documentation according to Reference [16]. The injection needle movement follows a pattern with a predetermined history for every injector and system regardless of the pressure waves. A pulse width modulation at the right point in time sets the frequency according to the firing order of the injectors. The needle valve velocity and movement signals are transmitted to the poppet valve.

This fixed pattern independent from pressure was selected in order to reduce the complexity of the model and allow for acceptable computer simulation time, which even with this simplification amounts to a couple of hours per run, and knowing that in reality the needle movement is affected by the pressure.

Upstream of the needle seat, a first fuel bore connects to a small volume representing the intersection with a second fuel bore. These elements have dimensions corresponding to an injector actually built as physical demonstrator. In System 1, which does not have an injector's accumulator, the second fuel bore is connected directly to the fuel feed pipe.

The injector's accumulator is a hydraulic chamber with a constant volume and pressure dynamics according to the relationship:

$$dp / dt = \beta \cdot dV / V$$

Where β is the fuel bulk modulus given as a function of the fuel pressure.

A flow integrator (I) depicts the flow rate history between the WDD feature (or the fixed throttle orifice for System 2) and the accumulator. The orifice is a fixed orifice with a given diameter and flow coefficient, while the check valve is spring loaded to a given cracking pressure and has a predetermined maximum opening.

Dynamic pressure waves are generated in the fuel feed pipes and connecting pipes, including the pump supply line. These pipes and line are interconnected by means of hydraulic chambers modelled as mentioned above, with a small, appropriate volume to create the right connection with the pipes.

For these pipes a complex distributed parameters model of a hydraulic pipe is used, suitable for situations where wave dynamics are important. The compressibility of the fluid and expansion of the pipe wall with pressure, based on wall thickness and material properties, are taken into account by using the effective bulk modulus. Pipe friction is taken into account using a friction factor based on the Reynolds number and relative roughness. Inertia of the fluid is taken into account and wave dynamics equations are used [17]. Each pipe has an external state variable representing the pressure at one end of the pipe, an external flow state variable at the opposite end and five internal pressure state and flow rate variables forming a staggered grid.

The mode used to calculate the derivatives of the pressure at the pipe end and at the internal pressure nodes is determined by the integer parameter value method. The basic formula for computing these pressure derivatives is [17]:

$$\partial P / \partial t = -(B / A) \cdot \partial Q / \partial x$$

Where A is the cross-sectional area of the pipe and B is the effective bulk modulus of the pipe/fluid combination.

The above components are assembled as shown in Figure 8 to form complete models of the 3 systems.

## SIMULATION RESULTS

Figure 9 shows a timely expanded view of the pressure histories in the 8 injectors of the 3 Systems for a part of the entire simulation duration (= 0.96 s) between 0.60 and 0.72 seconds, corresponding to 2 engine revolutions or 8 injection events. Each one of the 8 injectors fires once.

For the Systems 1, 2 and 3 are plotted from top to bottom the superimposed pressure tracings at

locations within the 8 injector bodies which are geometrically the same.

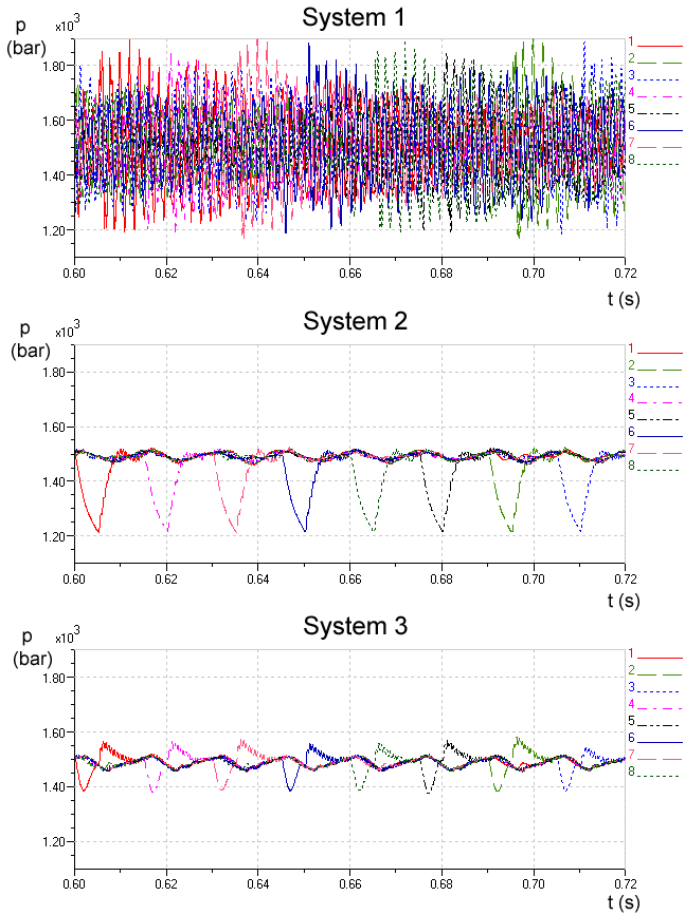


Figure 9: Timely expanded view of the pressure histories in the 8 injectors of the 3 Systems for the simulation time 0.60 to 0.72 seconds, corresponding to 2 engine revolutions or 8 injection events.

For the Systems 2 and 3 this location is in the injector's accumulators. For System 1, which does not have an accumulator chamber within the injector body, a geometrically equivalent location was selected. This is the small volume chamber shown under the injector accumulator of Figure 8, since in System 1 the fuel feed pipe connects directly, via the bore, to this small volume chamber due to the absence of an accumulator.

The averaged HP pump delivery is matched to the total injected quantity, so that the average system pressure of 1500 bar does not change during the simulation time.

System 1 with 2 rails shows a big number of superimposed pressure oscillations having maximum amplitudes of +350 / -300 bar from the average 1500 bar.

System 2 with accumulator and throttle within every injector shows repeatable pressure pulsations of +/- 30 bar around the average 1500 bar, with spikes of pressure drops down to about 1200 bar.

System 3 with the WDD's shows repeatable pressure pulsations of +/- 40 bar around the average 1500 bar, with spikes down to somewhat less than 1400 and up to about 1570 bar.

The extreme values of the individual pressure oscillations of System 1 arise from the hydraulic hammer caused at the end of every injection event. There are so many pulsations superimposed, that the pressure history during an injection event cannot be recognized.

System 2 clearly shows that the spikes of pressure drop from 1500 down to about 1200 bar are due to the expansion of the fuel within each injector's accumulator during the injection events. This is about half the value of the 600 bar pressure drop under the condition of quasi static accumulator expansion. After the end of an injection and prior to begin of the next one, the pressure recovers to the original value. Due to the throttled passage at the accumulator inlet, the pressure variation taking place within every injector during the injection event is almost not transmitted into the fuel lines interconnecting the injectors. This is the behavior of the well known, former ETH Accumulator system [1, 2, 3].

In the third picture of Figure 9, System 3 shows that the negative pressure spikes from 1500 down to about 1400 bar have a V-shape similar to the pressure drops of System 2. The positive spikes from 1500 up to about 1570 bar arise at the end of every injection event and are caused by the known hydraulic hammer.

It has to be noted that the individual geometrical locations of the pressure detection in the injectors for all 3 Systems are apart several meters. For System 2 and 3 this locality difference does not hinder the formation of a repeatable and superimposed pulsation of lesser amplitude (+/- 30-40 bar), which therefore is locality-independent. Due to this, the individual injection events always begin at a pressure that is much more close than +/- 30 bar, in fact less than +/- 7 bar (+/- 0.5%) apart from the selected 1500 bar average. This is the basis of a good repeatability of the injected amounts from injection to injection in the models and in a real system.

Figure 10 shows an expanded view of Figure 9 for the simulation time 0.673 to 0.683 seconds, or 10 ms duration, corresponding to 60°CA of an engine revolution with 1 injection event of the engine's cylinder 5 with an injection duration of 5 ms.

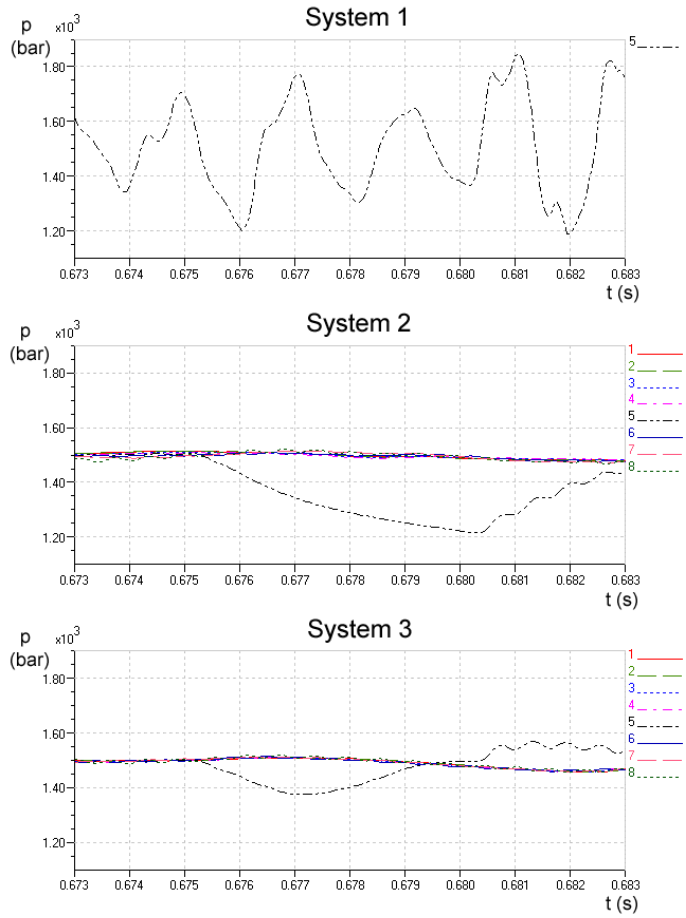


Figure 10: Expanded sight of Figure 9 for the simulation time 0.673 to 0.683 seconds (= 10 ms) corresponding to 60°CA revolution, with 1 injection event of cylinder 5 beginning at 0.675 and ending at 0.680 seconds.

For System 1, the pressure tracing of injector 5 is shown alone in the top picture of Figure 10. This is necessary in order to be able to distinguish this tracing from the other 7, which randomly pulsate around the average system pressure of 1500 bar.

The pressure pulsations in the two rails, which are not shown here, have smaller amplitudes of about +/- 40 bar. These pulsations are amplified in the high pressure fuel feed pipes between each injector and its rail. Since these pipes are not long enough for practical reasons, the travel time of a pressure wave from the nozzle to the rail and back is much shorter than the injection duration. The injection pressure thus fluctuates several times up and down around the average value, with a maximum amplitude of almost 600 bar. The pressure at injection begin (0.675 sec.) is 1700 bar, 200 bar above the average. This pressure changes randomly and is the cause of significant variations of the injected quantities. At the end of every injection, the pressure pulsation rises above 1800 bar, due to the hydraulic hammer of the liquid column suddenly stopped at the needle seat.

For System 2 all 8 injection pressure tracings are shown, but only cylinder 5 has an injection. During the injection event of injector 5, the injection pressure drops continuously and is down at almost 1200 bar prior to the end of injection. The hydraulic hammer at the nozzle closing time is much more dampened from the accumulator volume of every injector as compared to System 1. It is visible as a step-shaped pressure rise in Figure 10. The steps with a height of 70 bar are small, but still cause detectable fluctuations in the accumulators of the 7 remaining injectors. The pressure histories of all injectors thus do not exactly coincide.

System 3 shows coincident pressures in the accumulators of the 7 injectors which are not firing. Injector 5 is firing. Its accumulator pressure is at quite exactly 1500 bar at the begin of injection, drops 120 bar in the first 2 ms and then fully recovers up to 1500 bar before the end of injection. This re-filling of the accumulator is due to the open check valve placed at the entrance of each accumulator, which allows full communication at sound speed of the fluid between the injector that is firing and the rest of the system.

Fuel flows from the remaining 7 injector's accumulators towards injector 5, but only at a rate that is permitted by the throttle passage of every injector, because for these 7 injectors the check valve is closed. A unidirectional, unhindered flow into every firing injector's accumulator is realized. Because there is no rail, the length of the high pressure fuel pipes between the firing injector and the not firing injectors is at least double as compared to System 1. The pressure recovers at a slower, continuous pace. At the end of injection of cylinder 5 (or any other of the System 3), the hydraulic hammer propagates into the accumulator and makes its pressure rise above average. Its check valve shuts closed as soon as the flow direction changes from inflow into the accumulator to outflow into the system. The hydraulic hammer is firstly dampened by the accumulator volume. Secondly, it is released in the fuel system, but slower than for System 2, since the throttle passage of System 3 can be made smaller than in System 2.

Figure 11 compares the accumulator pressure histories of the injection events of cylinder 5 between System 2 and System 3.

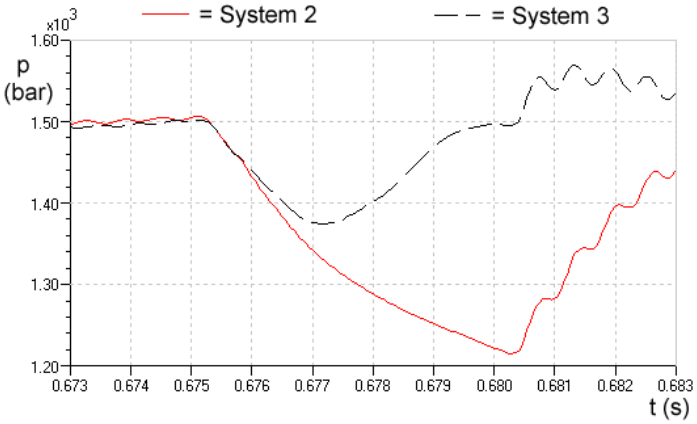


Figure 11: Comparison between System 2 and System 3 of the pressure histories in the injector's accumulator during the injection event (cylinder 5).

For the new System 3 with the WDD feature, from 2 ms after injection begin (simulation time = 0.677 sec.) up to the end of injection, the accumulator pressure, and thus also the pressure in the nozzle sac before the nozzle spray holes, is substantially higher. Towards the end of injection it is 280 bar or more than 20% higher. This increased pressure is achieved without a trade in another domain. The mechanical input work needed from the high pressure pump to generate and maintain the average 1500 bar system pressure is fully utilized for the injections. The higher pressure enhances the atomization and fuel distribution of the injected sprays into the combustion chamber and thus the engine combustion.

To achieve the same pressure level in the nozzle sac, the average injection pressure of System 2 would have to be raised from 1500 to 1750 bar. All components of System 2 must then be laid out for this higher pressure.

Figure 12 compares for the Systems 1, 2 and 3, for a duration of 10 ms between 0.673 and 0.683 seconds, the hydraulic flow HF of the nozzle spray orifices during the injection event, which is the injection rate IR, with the inflow IF into the injector.

For System 1 the inflow IF follows the injection rate IR and overshoots it about 0.5 ms after begin of injection. Subsequently, it swings several times over and under the injection rate IR and continues to swing after the end of injection. This swinging with little dampening is at the origin of the pressure pulsations observed for this system.

For System 2, due to the inlet throttle, the inflow IF does not follow the injection rate. While the injection rate IR rises fast, the inflow rises gradually and is always lower than the injection rate. The injection rate IR has its maximum 1.5 ms after injection begin and then falls slightly, according to the square root of the falling accumulator pressure. During the injection event, the throttle passage supplies about 50% of the injected fuel. The remaining 50% are supplied after the end of injection. The missing fuel during the injection is the cause of the falling accumulator pressure. A decreased injection pressure in the second part of the injection event is the consequence of this method used for the suppression of disturbing pressure waves.

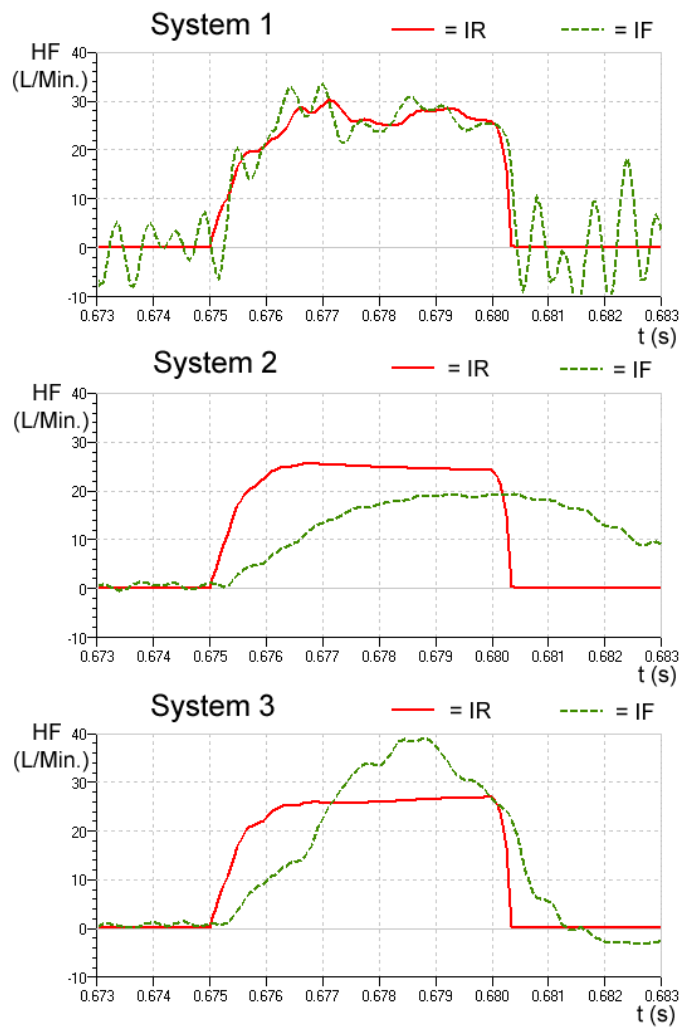


Figure 12: Comparison between the Systems 1, 2 and 3 of the hydraulic flow HF out of the injector nozzle (= injection rate IR) and of the inflow IF into the injector during the injection event of cylinder 5.

For System 3 the inflow IF is smaller than the injection rate IR in the first two milliseconds after injection begins. When the two flows become equal, the

pressure stops falling in the accumulator. Subsequently, the inflow IF is larger than the injected rate IR, the accumulator pressure rises again. The injection rate shape rises continuously from injection begin until the end of injection. At the end of injection the total inflow just about equalizes the injected amount. One millisecond after the end of injection the inflow IF changes direction and gradually discharges excess pressure and fuel from the accumulator into the high pressure system.

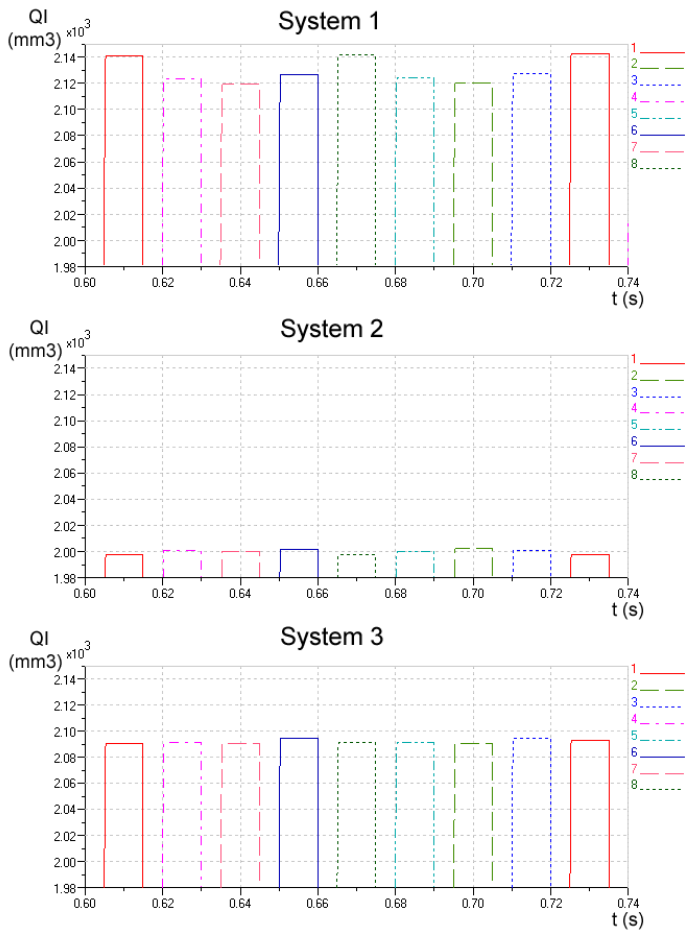


Figure 13: Comparison of the injected quantities QI in mm3 per Stroke for the 8 injectors of the Systems 1, 2 and 3.

For the three systems, Figure 13 shows the integrals of the injection rate shapes IR of all 8 injectors in the simulation timeframe 0.60 - 0.74 ms including 9 injection events. This is one more injection than occurring during two full engine revolutions.

The integrals represent the injected quantities QI. In order to be able to distinguish the variations from injection to injection, the ordinate only shows the top end with quantities ranging from 1980 to 2150 mm3 per Stroke. The AMESim flow integrator (II) keeps the integral at its maximum up to 10 ms after the end of an injection and then switches to 0 quantity. The plateaus allow distinguishing the variability of the injected quantities.

System 1 on top of Figure 13 shows variations of 22 mm3 per Stroke under the 8 injectors between a minimum of 2120 and a maximum of 2142 mm3 per Stroke. This represents 1.1% and isn't much taking into account the wide pressure pulsations that take place in this system. The fact that during the injection event the pressure swings back and forth several times, evens out variations to some extent, but only because in the model there is a timely fixed, pressure independent needle valve movement. In a real system, the actual pressure at injection begin and end widely influences the needle valve movement and thus a real system has larger, random variations of QI than shown here, due to this coupling of actual pressure and needle valve movement.

For System 2 the injected amount varies between 1998 and 2004 mm3 per Stroke. This is a 6 mm3 variation or 0.3%, thus negligible. The average injected quantity is 2000 mm3 per Stroke.

System 3 shows injected amounts from 2091 to 2097 mm3 per Stroke with an analogous variation of 0.3% like System 2. For both Systems 2 and 3 the variability of a real system is therefore expected to be accordingly less as compared to a real System 1.

The average injection quantity of System 2 is over 90 mm3 per Stroke or 4.5% smaller than in System 3. This is due to the decreased injection pressure of System 2 in the second part of the injection events.

## CONCLUSION

Three 8 cylinder Common Rail injection systems for engines with a power from 1 to about 5 MW have been modeled with the simulation software AMESim and the computation results were compared.

System 1 has two rails and has been tested on an engine with very good results [9]. System 2 has individual accumulators within every injector and is designed according to the knowledge of the basic Accumulator system with a throttling passage conceived in the beginning of the 1980ies. System 3 is also without rails. It has individual injector's accumulators and a wave dynamics and dampening system named WDD. System 3 is new.

The modeling results of the hydraulic performance of these three systems indicate that System 3 with WDD has an injection characteristic with 20% more pressure at the nozzle if compared to System 2. Systems 2 and 3 have a very uniform fuelling of the injectors, and are of more simple and practical realization than System 1 due to the absence of the rails.

## REFERENCES


1. M. Berchtold, M. Ganser, 1983: “A Fuel Injection System for Passenger Car Diesel Engines”, CIMAC Paper, Paris.
2. M. Ganser, 1983: “Akkumuliereinspritzung: theoretische und experimentelle Untersuchung eines elektronisch gesteuerten Dieseleinspritzsystems für Personenwagenmotoren”, Ph.D. Thesis Nr. 7462, Swiss Federal Institute of Technology, Zurich, Switzerland.
3. US-Patent No. 4,566,416, 1986.
4. US-Patent No. 4,838,231, 1989.
5. R. Rinolfi, R. Imarisio, R. Buratti, 1995: “The potentials of a new Common Rail Diesel fuel injection system for the next generation of DI Diesel Engines”, IC-Engines Conference, Vienna.
6. K. Hoffmann, K. Hummel, T. Maderstein, A. Peters, 1997: „Das Common Rail Einspritzsystem - ein neues Kapitel der Dieseleinspritztechnik“, MTZ Motortechnische Zeitschrift 58, Oct. 97.
7. E. Brucker, W. Bloching, 1994: „Entwicklungstendenzen bei Einspritzsystemen für 4-Takt-Dieselmotoren“, 16. Informationstagung des Instituts für Schiffsbetriebsforschung, Flensburg (Germany), June 94.
8. W. Rudert, 1997: „Das Common-Rail-Einspritzsystem am schnelllaufenden Dieselmotor - Konzeptionelle Vorteile und Betriebserfahrungen“, Common Rail Conference, Swiss Federal Institute of Technology, Zurich (Switzerland), Nov. 97.
9. E. Kamleitner, R. Coester, S. Adorf, 2004: “Re-design of the DEUTZ diesel engine series TBD 628 applying Common Rail and variable turbine geometry”, CIMAC Paper 233.
10. CIMAC Paper 232, 2004
11. R. Poola, 2004: V.3 Advanced Fuel-Injection System Development to Meet EPA Emission Standards for Locomotive Diesel Engines, DOE FY 2004 Progress Report, pages 318-324.
12. D. Pike, 2004: Yachting, Nov. 2004, pages 178-180.
13. M. Brezonick, 2004: Diesel Progress Int.Ed., Nov.-Dec. 2004, pages 26-30.
14. D. Porter, 2005: SAE OHE, March 2005, pages 82-85.
15. Patent Application DE 102 10 282 A1, 2002.
16. O. De Groen, 1996: „Rechenprogramm zur Simulation von Hochdruckeinspritzsystemen für Nutzfahrzeuge“, Motortechnische Zeitschrift MTZ 57
17. R.C. Binder, 1956: „Fluid Mechanics“, 3rd Edition, 3rd Printing. Prentice-Hall Inc., Englewood Cliffs, NJ.


## CONTACT


Dr. Marco Ganser
Ganser CRS AG
Industriestrasse 26
CH-8404 Winterthur
Tel. +41 (0)52 235 38 88
Fax.+41 (0)52 235 38 81
Email m.ganser@crsag.ch
www.ganser-crs.ch